WRD580 FLANGE STANDARD:COVER/GROOVE

1.0	ELECTRICAL SPECIFICATIONS	
1.1	Frequency Range	5.8-16GHz
1.2	Waveguid Tape	WRD580
1.3	Flange	COVER/GROOVE

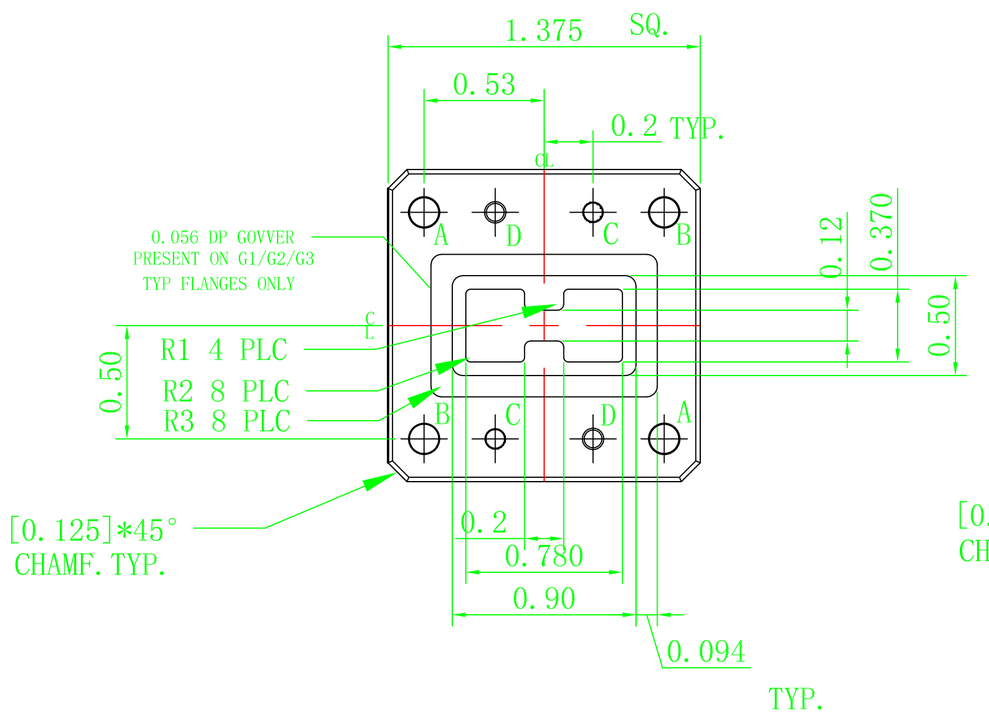

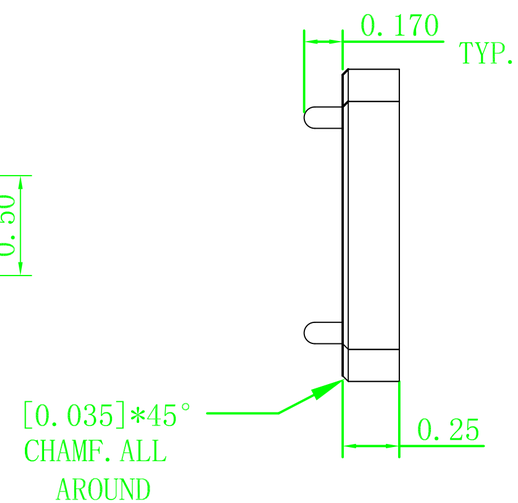

PAGE OF	DATE
PROPRIETARY INPORMATION THE INFORMATION CONTAINED IN THIS DOCUMENT IS THE PROPERTY OF RF-LAMBDA EXCEPT ASSPECIFICALLY AUTHORIZED IN WRUTUBG BT RF-LAMBDA.THELOLDER OF THIS DOCUMENT:SHALL KEEPALL INFORMATION CONTAINED HEREIN CONFIDENTAL AND SHALL PROTECT SAMEIN THE WHOLE OR IN PARTFROM DISCLOSURE AND DISSEMINATION OF ALL THIRD PARTIES AND SHALL USE SAME FOR OPERATING AND MAINTENANCE PORPUSES ONLY	DESIGN RFPC RF-LAMBDA RFPC
WRD580 FLANGE COVER	CAD MODEL REVISION 19 ASSEMBLY REVISION VS52 ASSEMBLY NAME RFLVR17 DRAWING NUMBER D05-1
www.rflambda.com	
RF-LAMBDA	SIZE LT · SHEETS 1 OF 1