WR112 FLANGE STANDARD:UG_CHOKE

1.0	ELECTRICAL SPECIFICATIONS	
1.1	Frequency Range	6.59-9.99GHz
1.2	Waveguid Type	WR112/WG15
1.3	Flang	UG_ CHOKE

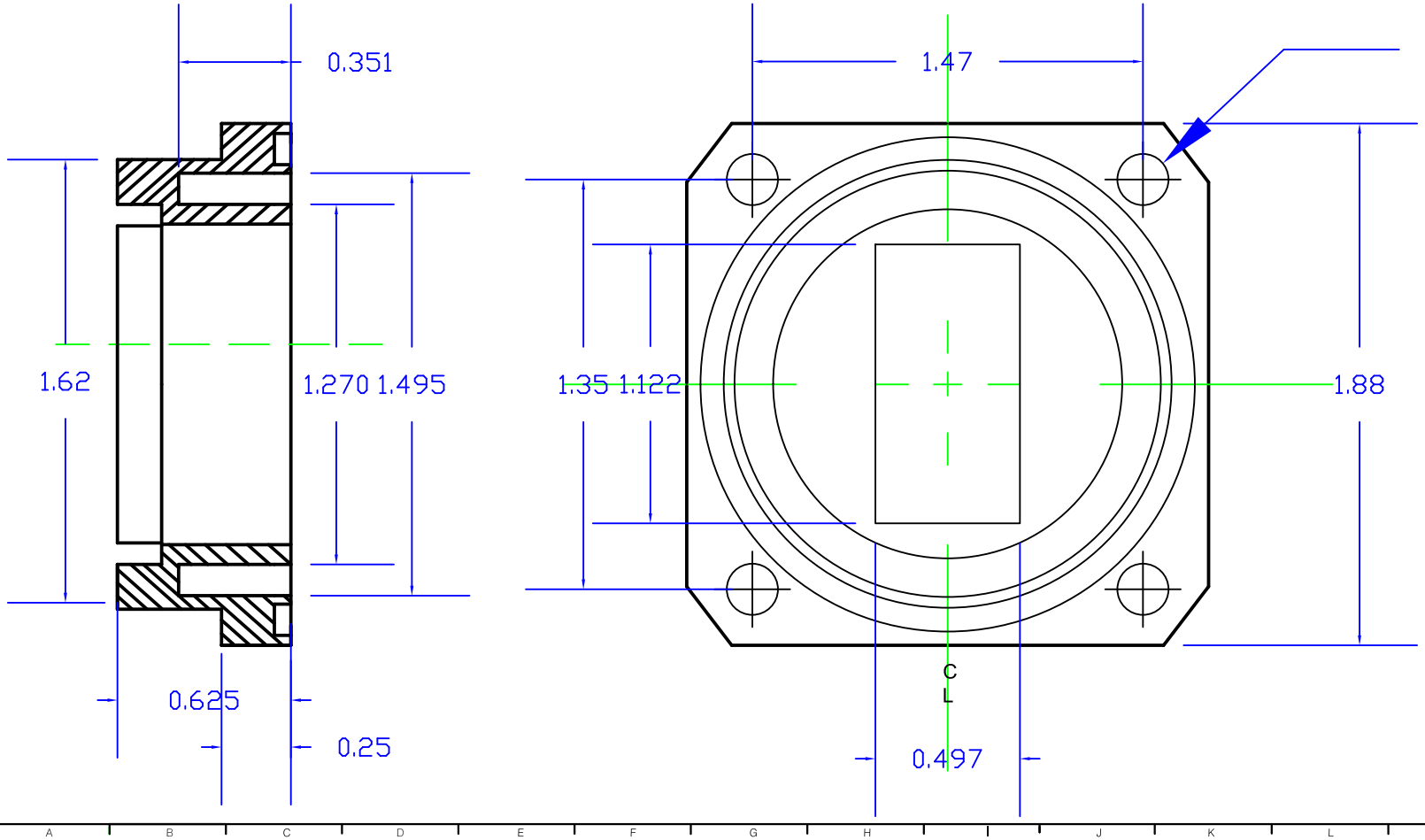

PAGE OF	DATE
PROPRIETARY INFORMATION THE INFORMATION CONTAINED IN THIS DOCUMENT IS THE PROPERTY OF RF–LAMBDA EXCEPT ASSPECIFICALLY AUTHORIZED IN WRUTUBG BT RF–LAMBDA.THELOLDER OF THIS DOCUMENT:SHALL KEEPALL INFORMATION CONTAINED HEREIN CONFIDENTAL AND SHALL PROTECT SAMEIN THE WHOLE OR IN PARTFROM DISCLOSURE AND DISSEMINATION OF ALL THIRD PARTIES AND SHALL USE SAME FOR OPERATING AND MAINTENANCE PORPUSES ONLY	DESIGN RFPC RF–LAMBDA RFPC
WR112 FLANGE COVER	CAD MODEL REVISION 19 ASSEMBLY REVISION VS52 ASSEMBLY NAME RFLVR17 DRAWING NUMBER D05-1
www.rflambda.com RF-LAMBDA	SIZE LT · SHEETS 1 OF 1