HIGH POWER FIXED TERMINATION --- RFST500GXX

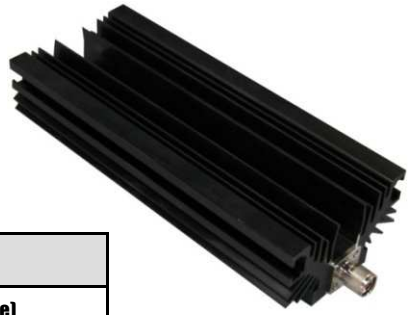

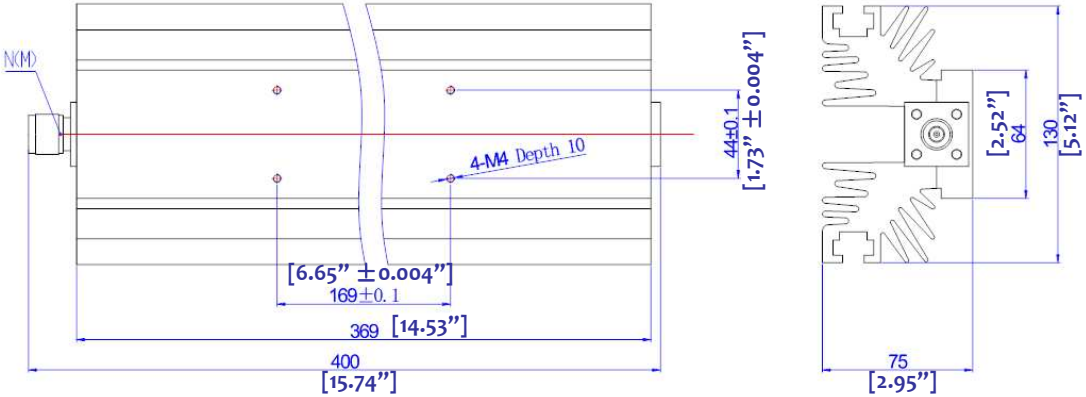

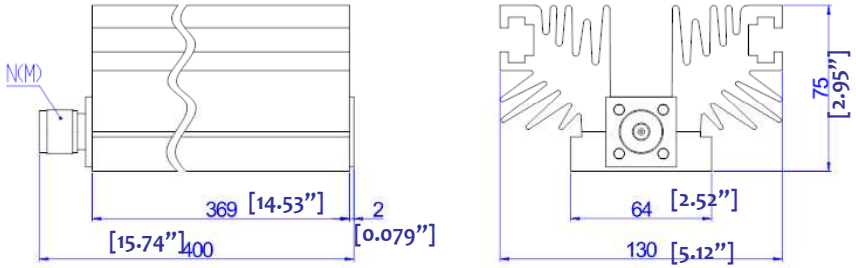

1.0	Mechanical Specifications	
1.1	Connector	N or 7/16 (Male or Female)
1.2	Size	400X 130 X 75mm 15.75" X 5.12" X 2.95"
1.3	Weight	4.3kg
1.4	External Finish	Body painted black epoxy enamel

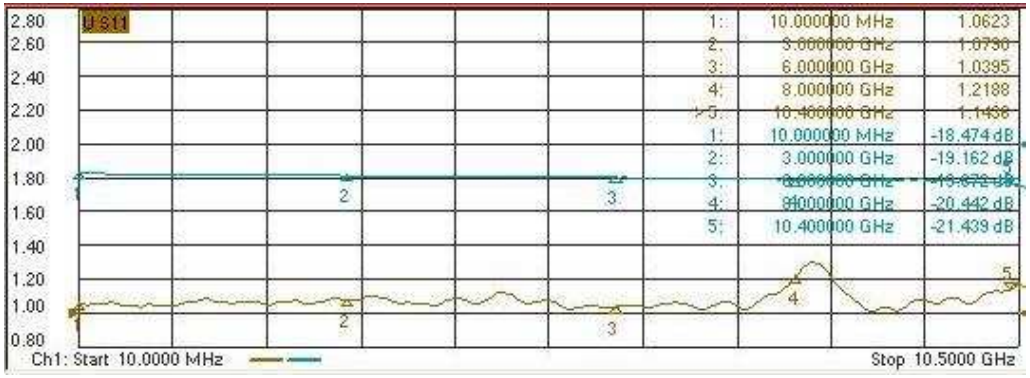

2.0	Environment specifications	
2.1	Operation Temp.	-40°C~+85°C
2.2	Storage Temp.	-55°C~+125°C
2.3	Altitude	45000 ft
2.4	Vibration	10g rms (15 degree 2KHz)
2.5	Humidity	100% RH at 35c, 95%RH at 40 deg c
2.6	Shock	20G for 11msc
2.7	Cooling	FAN required for long time operation

3.0 Electrical Specifications

PN	Frequency (GHz)	VSWR (max.)	Power (CW)	Peak Power (KW)
RFST500G06	DC-6GHz	1.30	500	5KW
RFST500G08	DC-8GHz	1.45	500	5KW
RFST500G10	DC-10GHz	1.55	500	5KW

PAGE 1 OF 1

DATE: Sep 2th 2006

PROPRIETARY INFORMATION
THE INFORMATION CONTAINED IN THIS DOCUMENT IS THE PROPERTY OF RF-LAMBDA EXCEPT AS SPECIFICALLY AUTHORIZED IN WRUTUBG BT RF-LAMBDA. THE HOLDER OF THIS DOCUMENT SHALL KEEP ALL INFORMATION CONTAINED HEREIN CONFIDENTIAL AND SHALL PROTECT SAME IN THE WHOLE OR IN PART FROM DISCLOSURE AND DISSEMINATION OF ALL THIRD PARTIES AND SHALL USE SAME FOR OPERATING AND MAINTENANCE PURPOSES ONLY

DESIGN: RFPC

RF-LAMBDA: RFPC

RFST500GXX
HIGH POWER
TERMINATION

CAD MODEL REVISION: 10

ASSEMBLY REVISION: VS52

ASSEMBLY NAME: RFLVR07

DRAWING NUMBER: D05-A

www.rflambda.com

RF-LAMBDA

SIZE: LT

SHEETS: 1 OF 1