32-37GHz Digital Step Absorptive Phase Shifter

Features

- Wide Band Operation up to 10% wide bandwidth.
- High linearity up to 20dBm P1dB
- TTL compatible driver include
- Fast Switching Speed
- Flat phase shifting response, low phase error.
- Low Insertion Loss and High Isolation
- Temperature Range -40°C~+85°C
- Customization available upon request

360° Digital Phase Shifter 4 bits, 5 bits, 6 bits							
Part Number	Frequency (GHz)	Bandwidth	Insertion Loss (dB)	VSWR	Power	Step	Range
RFPSHT3237GN4	32-37GHz	10%-15%	10dB	1.80	20dBm	22.50°	360°
RFPSHT3237GN5	32-37GHz	10%-15%	11dB	1.80	20dBm	11.25°	360°
RFPSHT3237GN6	32-37GHz	10%-15%	12dB	1.80	20dBm	5.625°	360°

Phase accuracy: <±2 degree @11.25°, <±15°@ other total,
Phase flatness: +/-4 degree

Electrical Operation

DC Biasing: +5.0V (50mA max.)
-5.0V (200mA max.)
Power Handle: 0dBm~+20dBm (upon request)
DB15 Pins:

Pin 1,2,9~15	n/a
Pin 3	GND
Pin 4	C1
Pin 5	C2
Pin 6	C3
Pin 7	C4
Pin 8	C5

Mechanical Specification

Finishing: Gold plating for brass material
Other finishing available
Connector: SMA-F Per MIL-C-39012
Control PIN: 0.02" dia x 0.15" solder pins
Weight: 75 grams max.
Mounting: (4) 0.1" dia through holes

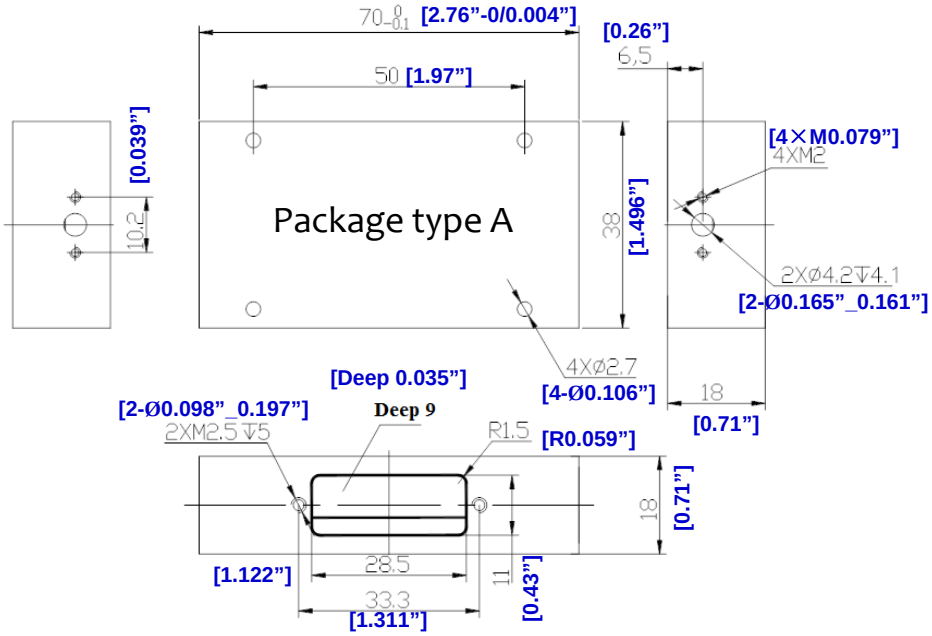

32-37GHz (10% Bandwidth) Digital Step 360° Phase Shifter
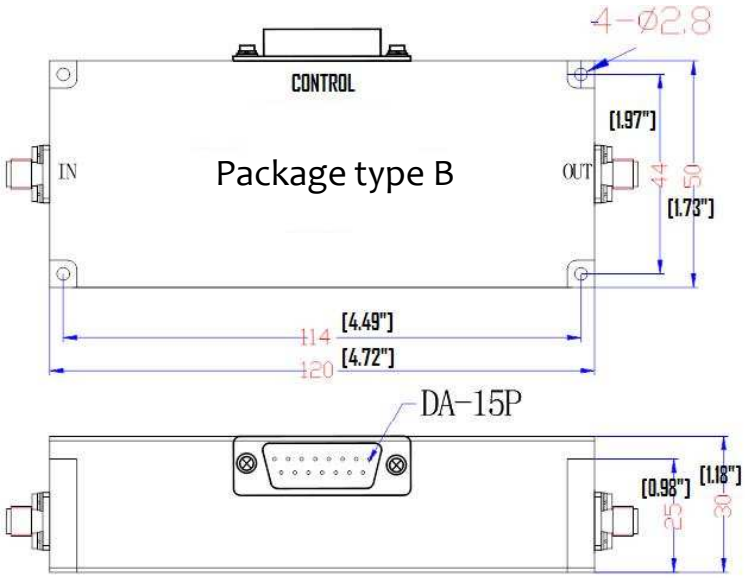
32-37GHz (10% Bandwidth) Digital Step 360° Phase Shifter